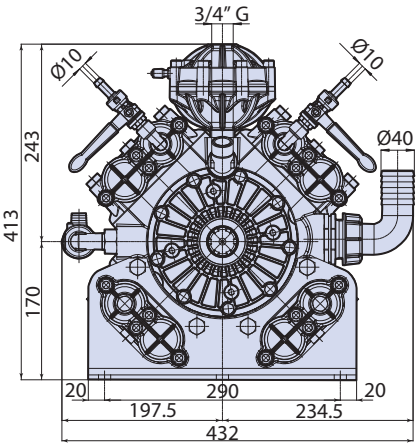
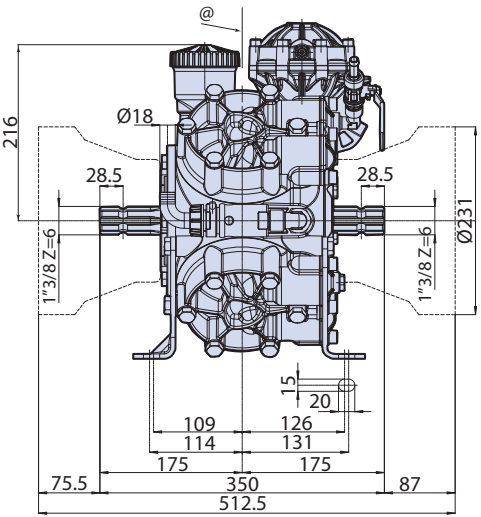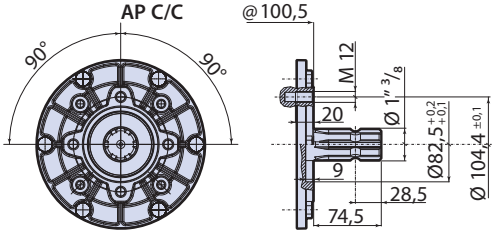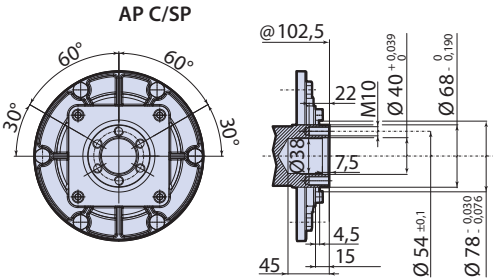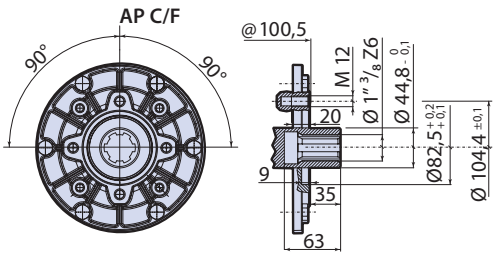
@ = Pump axis - Asse pompa