WHY 1520

POMPA PER MOTORE IDRAULICO - PUMP FOR HYDRAULIC MOTOR
POMPE POUR MOTEUR HYDRAULIQUE - BOMBA PARA MOTOR HIDRÁULICO

CARATTERISTICHE - SPECIFICATIONS

			WHY
IN	DIAMETER	Ø	3/8 BSP (PUMP) - 1/2 BSP (VALVE)
	PRESS.	Min.	1 bar 15 PSI
		Max.	6 bar 87 PSI
	TEMP.	Max.	60° C. 140° F.
OUT	DIAMETER	Ø	3/8 BSP
SHAFT		Ø	HOLLOW 14X17 DIN 5482
OIL		SAE 75W 90	0.5 Litri 0.13 U.S.G.
PESO WEIGHT		Kg / lbs	5.8/12.7 (PUMP) 11.8/26 (MOTOR PUMP)
PISTONE PLUNG.	DIAMETER	mm	18
CORSA STROKE		mm	12.4

KIT ACCESSORI - ACCESSORIES KIT - KIT ACCESSOIRES - KIT ACCESORIOS (OPTIONAL)

02.6198.97.A

Lancia- Pistola- Ugello – Filtro- Tubo di mandata 5/16" - Lance– Gun- Nozzle –Filter- High pressure hose 5/16"
Lance- Pistolet – Buse - Filtre- Flexible H.P. 5/16" - Lanza- Pistola- Boquilla- Filtro- Manguera de alta presión 5/16"

WHY 1520

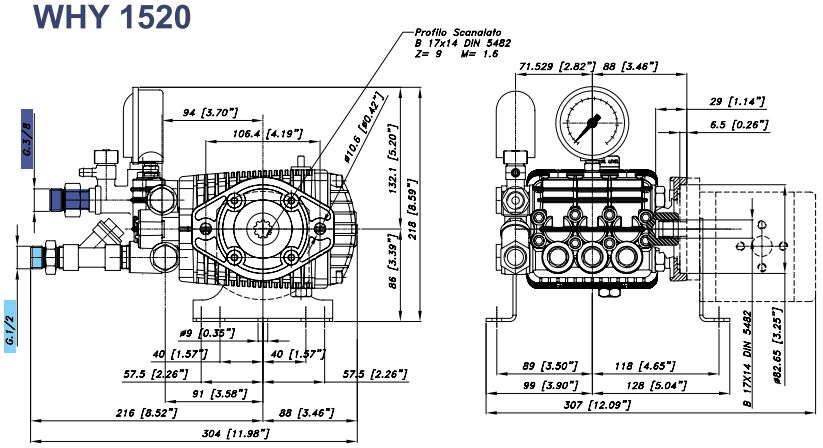

02.6195.97.3
POMPA PER MOTORE IDRAULICO
(Manometro e kit piedini inclusi)
PUMP FOR HYDRAULIC MOTOR
(Pressure gauge and mounting rail kit included)
POMPE POUR MOTEUR HYDRAULIQUE
(Equipement fourni: manomètre et kit supports)
BOMBA PARA MOTOR HIDRÁULICO
(Manómetro y juego de pies incluidos)

02.6196.97.3
POMPA CON MOTORE IDRAULICO
HYDRAULIC MOTOR PUMP
POMPE AVEC MOTEUR HYDRAULIQUE
BOMBA CON MOTOR HIDRÁULICO

CARATTERISTICHE - FEATURES

PERFORMANCE CHART

CODICE PART NR.	MAX L/min	MAX GPM	PRESS Bar	PRESS PSI	RPM 950 L/min	RPM 950 GPM	RPM 950 KW	RPM 950 HP	RPM 1450 L/min	RPM 1450 GPM	RPM 1450 KW	RPM 1450 HP	RPM 1725 L/min	RPM 1725 GPM	RPM 1725 KW	RPM 1725 HP	Oil Pressure (hydraulic motor) Bar	Oil Pressure PSI
WHY 1520 02.6195.97.3 02.6196.97.3	15.0	4.0	150	2175	8.7	2.3	2.6	3.4	13.0	3.4	3.8	5.1	15.0	4.0	4.4	5.9	50	725
			180	2610	8.7	2.3	3.1	4.1	12.9	3.4	4.6	6.1	14.9	3.9	5.3	7.1	60	870
			200	2900	8.6	2.3	3.4	4.5	12.9	3.4	5.1	6.8	14.9	3.9	5.8	7.8	80	1160
PORTATA OLIO MOTORE IDRAULICO HYDRAULIC MOTOR OIL FLOW					22	5.8			32	8.4			38	10				